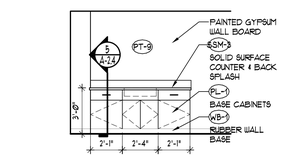

4 INTERIOR ELEVATIONS
1/4" = 1'-0" BREAK ROOM 114

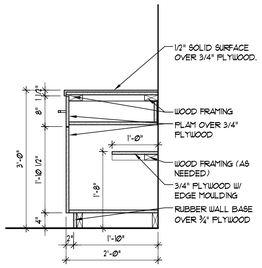

5 CABINET DETAIL
3/4" = 1'-0"

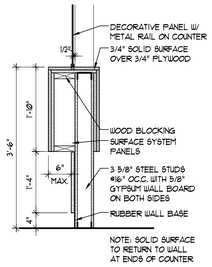

6 COUNTER DETAIL
3/4" = 1'-0"

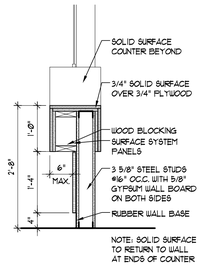

8 COUNTER DETAIL
3/4" = 1'-0"

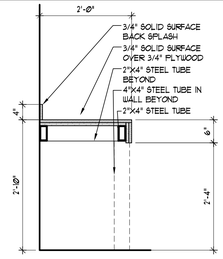

9 COUNTER DETAIL
3/4" = 1'-0"

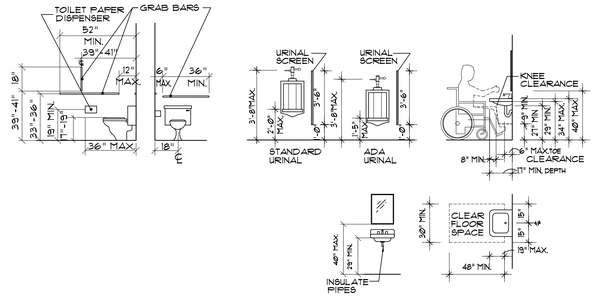

7 A.D.A. REQUIREMENTS
SCALE: NOT TO SCALE

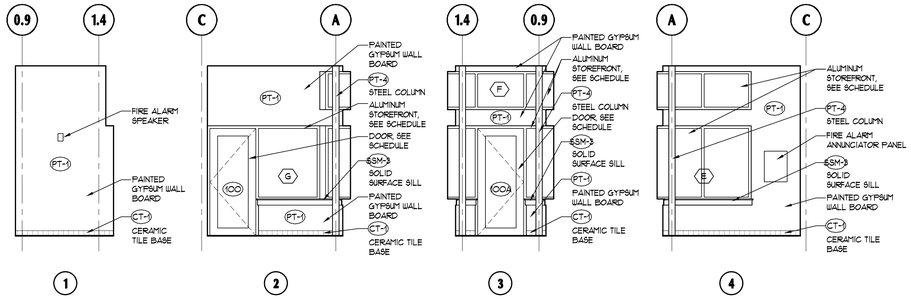

1 INTERIOR ELEVATIONS
1/4" = 1'-0" VESTIBULE 100A

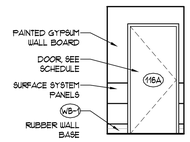

8 INTERIOR ELEV.
1/4" = 1'-0" CORRIDOR 118

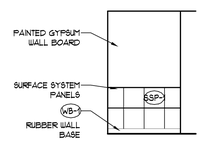

9 INTERIOR ELEV.
1/4" = 1'-0" CORRIDOR 118

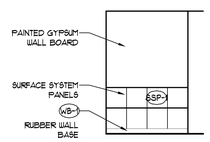

10 INTERIOR ELEV.
1/4" = 1'-0" CORRIDOR 118

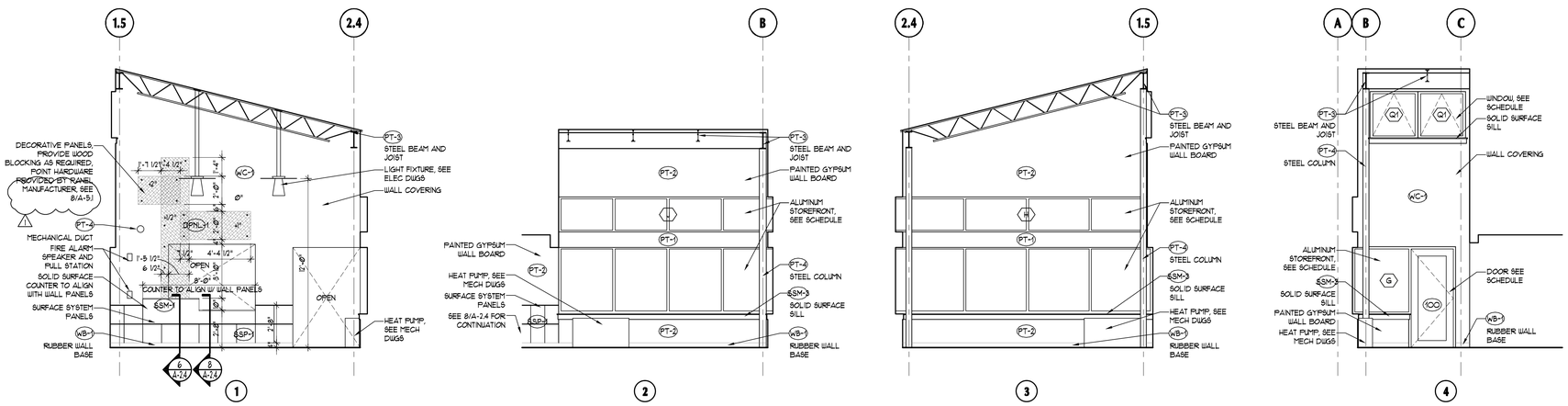

2 INTERIOR ELEVATIONS
1/4" = 1'-0" LOBBY 100

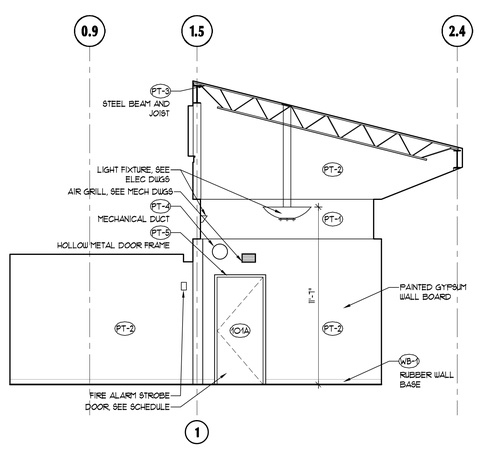

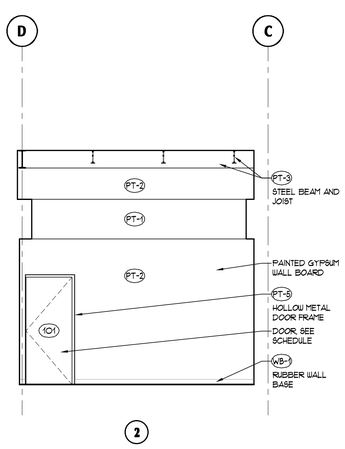

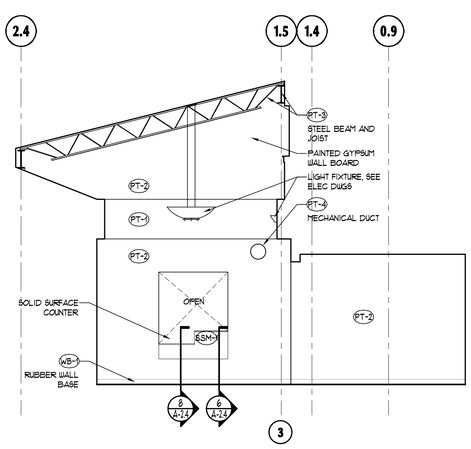

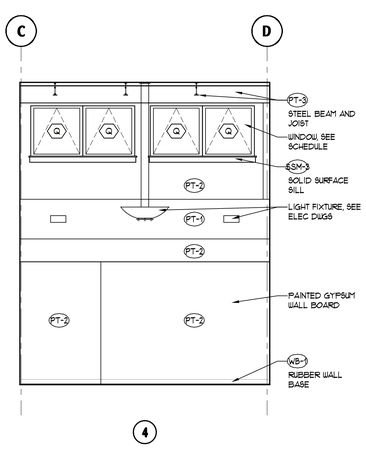

3 INTERIOR ELEVATIONS
1/4" = 1'-0" RECEPTION / OFFICE 101

Bignell Watkins Hasser
ARCHITECTS P.C.

ONE PARK PLACE, SUITE 250
ANNAPOLIS, MARYLAND 21401
Maryland: (301) 261-8228
MD Fax: (410) 224-4443
Baltimore: (410) 841-6595
Annapolis: (410) 224-2727

8500 LEESBURG PIKE, SUITE 503
VIENNA, VIRGINIA 22182
Virginia: (703) 288-3320
VA Fax: (703) 288-4211
Website: www.bigwaho.com

These drawings are the property of the Architect, Bignell Watkins Hasser Architects P.C. Unauthorized reproduction for any purpose is an infringement upon copyright laws. Violators will be subject to prosecution by fullest extent of the law.

Written dimensions on these drawings shall have precedence over scale dimensions. Contractors shall verify and be responsible for all dimensions and conditions on the job and this office must be notified of any variation from the dimensions and conditions shown by these drawings.

Revisions

#	Date	
	02/17/10	PERMIT/BID SET
1	04/09/10	ADDENDUM 2

Client:
CITY OF TAKOMA PARK

Location:
TAKOMA PARK, MD

Project:
CITY OF TAKOMA PARK PUBLIC WORKS FACILITY

ADMINISTRATION BLDG INTERIOR ELEVATIONS

Drawn by: AS

Project No.: 09028.00

Date: 01/25/10

Professional Certification
I certify that these documents were prepared or approved by me, and that I am a duly licensed architect under the laws of the State of Maryland. License number _____ expiration date _____

A-2.4