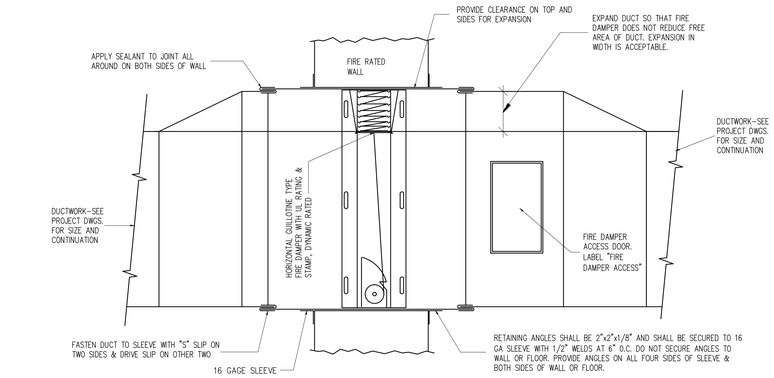

A / M-13 SECTION THRU FIRE DAMPER AT FIRE RATED WALL

NOT TO SCALE

NOTES:

1. INSTALL THIS DAMPER WHERE F.D. SHOWN ON THE PROJECT DRAWINGS.
2. SLEEVE SHALL BE 14 GAGE IF DUCT IS LARGER THAN 36x24.

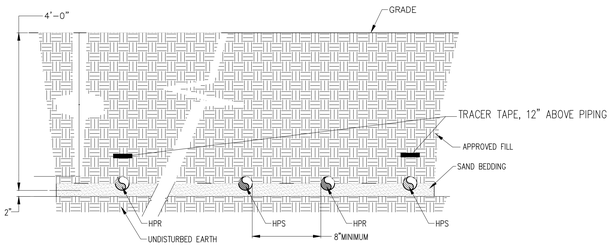

B / M-13 UNDER GROUND PIPE SECTION

SCALE: NOT TO SCALE

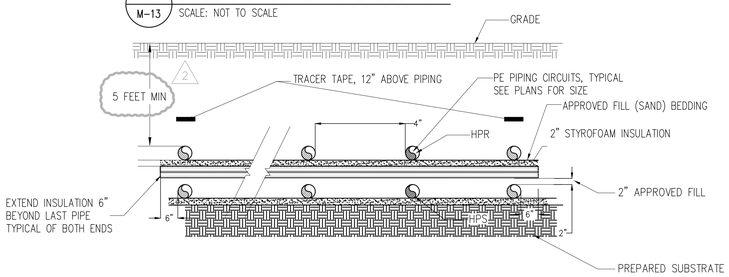

C / M-13 UNDER GROUND PIPE SECTION

SCALE: NOT TO SCALE

NOTES:

1. THIS PIPING DETAIL IS FOR GEOTHERMAL WELL FIELD HORIZONTAL PIPING CIRCUITS WHEN ENGAGED.
2. INSULATION IS ONLY USED WHEN PIPING IS GANGED TOGETHER.

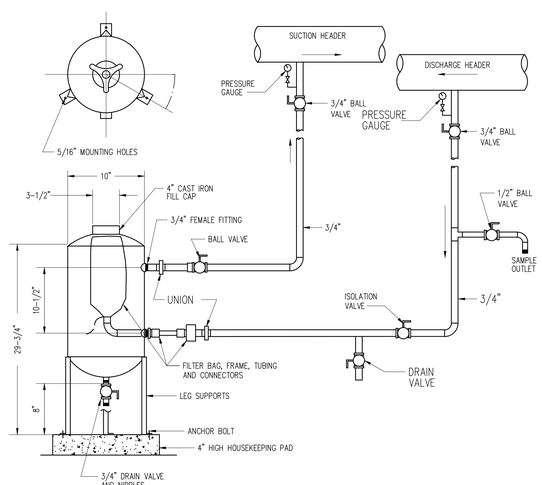

F / M-13 BY-PASS FEEDER DETAIL

NOT TO SCALE

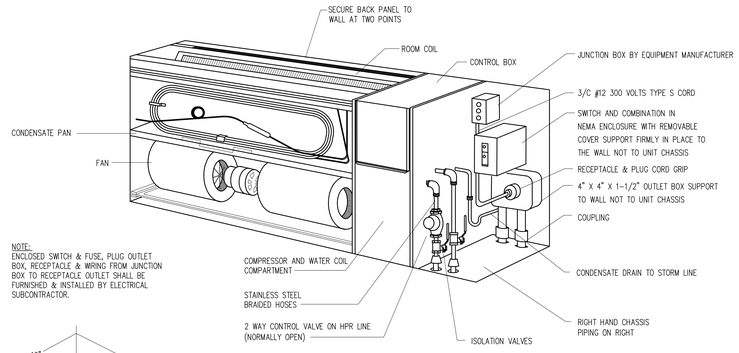

NOTE:
ENCLOSED SWITCH & FUSE, PLUG OUTLET BOX, RECEPTACLE & WIRING FROM JUNCTION BOX TO RECEPTACLE OUTLET SHALL BE FURNISHED & INSTALLED BY ELECTRICAL SUBCONTRACTOR.

CUT-AWAY ISOMETRIC VIEW – BASIC CHASSIS

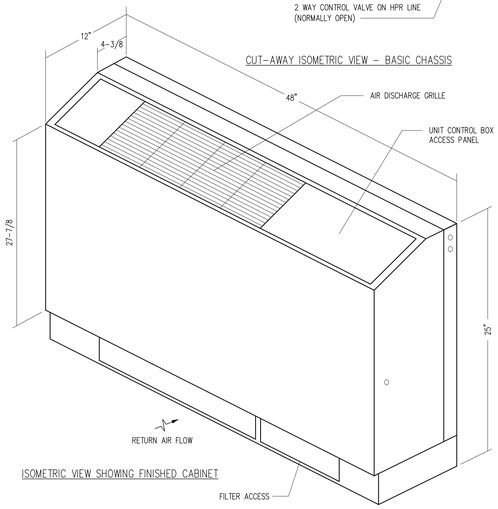

ISOMETRIC VIEW SHOWING FINISHED CABINET

INSTALLATION INSTRUCTIONS

1. POSITION CHASSIS TIGHT AGAINST FINISHED WALL, DIRECTLY ON FLOOR. CHECK ELECTRIC AND PIPE STUB SLEEVE LOCATIONS.
2. USE HOLES PROVIDED OR DRILL 2 ADDITIONAL HOLES IN BACK PANEL AT TOP TO LINE UP WITH SOLID SUPPORT IN WALL.
3. SHIM DEAD LEVEL.
4. SHORT CIRCUIT SUPPLY AND RETURN RUNOUTS INITIALLY BEFORE SYSTEM FLUSHING.
5. CONNECT SUPPLY, RETURN AND CONDENSATE AFTER SYSTEM FLUSHING.
6. CONNECT CORRECT SUPPLY WIRING AT JUNCTION BOX PER WIRING DIAGRAM.
7. DON NOT REMOVE PAPER BOARD COVER FROM ROOM COIL AND DRAIN PAN UNTIL CABINET INSTALLATION.
8. CABINET IS ONE PIECE AND IS HUNG ON THE CHASSIS AT THE TWO CABINET POSITIONING TABS. ROTATE CABINET DOWNWARD OVER CHASSIS AND SECURE TOE-STEP RIGHT AND LEFT WITH TWO SHEETMETAL SCREWS INTO SIDE FLANGES OF CHASSIS.
9. INSULATE ALL PIPING INSIDE CASING WITH ½" UNICELLULAR INSULATION, EXTERNAL INSULATION BELOW SLAB WHERE APPLICABLE ON THE VERTICAL PIPING DOWN TO THE HORIZONTAL BED AT APPROXIMATELY 30" BELOW FINISHED FLOOR ELEVATION.

D / M-13 CONSOLE WATER SOURCE HEAT PUMP INSTALLATION DETAIL

NOT TO SCALE

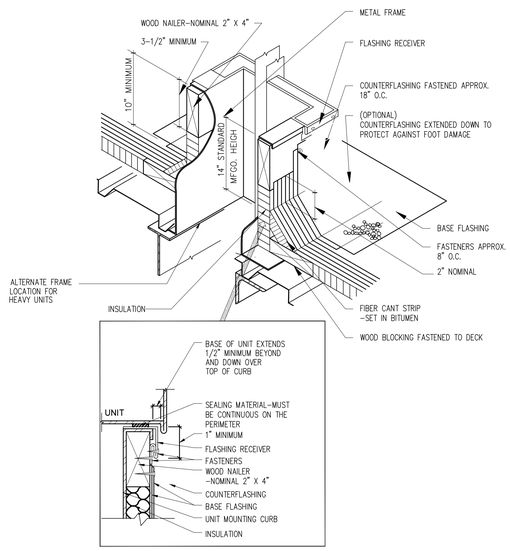

G / M-13 TYPICAL ROOF CURB AND ISOLATION RAIL DETAIL

SCALE: NOT TO SCALE

NOTES:

1. ON ROOF TOP UNIT INSTALLATIONS MAKE DECK PENETRATIONS THE MINIMUM SIZE FOR DUCTWORK CONNECTIONS. DO NOT EXPOSE THE BOTTOM OF THE RTU WHEN VIEWED FROM BELOW DECKING. PROVIDE 9" OF BATT INSULATION ON DECKING FROM INSIDE EDGE TO INSIDE EDGE OF CURB. PROVIDE TWO LAYERS OF 5/8" GYPSUM BOARD (GREEN BOARD TYPE).

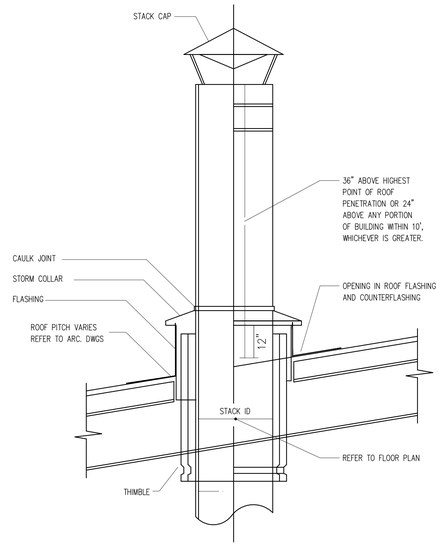

E / M-13 STACK SECTION DETAIL

SCALE: NOT TO SCALE

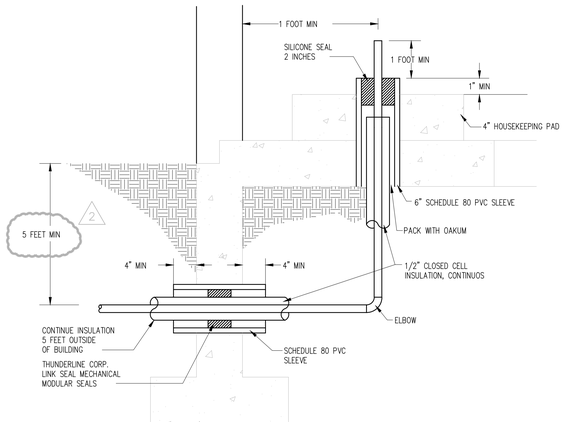

H / M-13 DETAIL OF HPS AND HPR BUILDING STUBOUT

SCALE: NOT TO SCALE

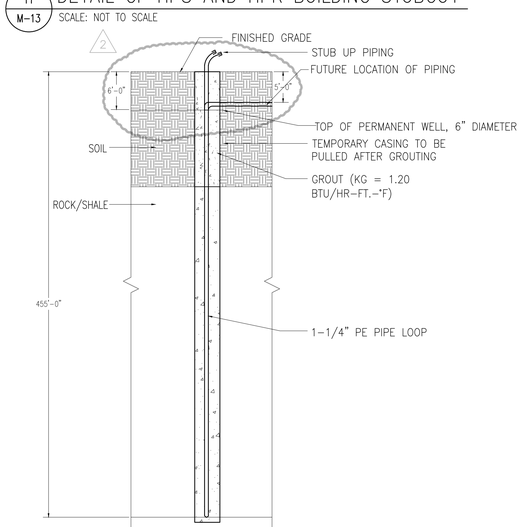

I / M-13 TYPICAL BORE HOLE DETAIL

SCALE: NOT TO SCALE

Bignell Watkins Hasser
ARCHITECTS P.C.

ONE PARK PLACE, SUITE 250
ANNAPOLIS, MARYLAND 21401
Maryland: (301) 261-8228
MD Fax: (410) 224-4445
Baltimore: (410) 841-6595
Annapolis: (410) 224-2727

8500 LEESBURG PIKE, SUITE 503
VIENNA, VIRGINIA 22182
Virginia: (703) 288-3320
VA Fax: (703) 288-4211
Website: www.bigwaha.com

These drawings are the property of the Engineer. Weigand Associates, Inc. Unauthorized reproduction for any purpose is an infringement upon copyright laws. Violators will be subject to prosecution by fullest extent of the law.
Written dimensions on these drawings shall have precedence over scale dimensions. Contractors shall verify and be responsible for all dimensions and conditions on the job and this office must be notified of any variation from the dimensions and conditions shown by these drawings.

MPE Consulting Engineers
WEIGAND ASSOCIATES, INC.
12 SOUTH SUMMIT AVENUE, SUITE 200 GAITHERSBURG, MARYLAND 20877
TELEPHONE 301-258-3300 FACSIMILE 301-258-3301 WWW.WAINET.NET

Revisions

#	Date	
	02/17/10	PERMIT/BID SET
2	04/22/10	ADDENDUM #4

Client: CITY OF TAKOMA PARK

Location: TAKOMA PARK, MD

Project: CITY OF TAKOMA PARK PUBLIC WORKS FACILITY

MECHANICAL DETAILS

Drawn by	WAI Project NO.
PC	09020
Project No.	**Date**
09028.00	01/25/10

Professional Certification
I certify that these documents were prepared or approved by me, and that I am a duly licensed engineer under the laws of the State of Maryland. License number 17566 expiration date May 29, 2011

M-13