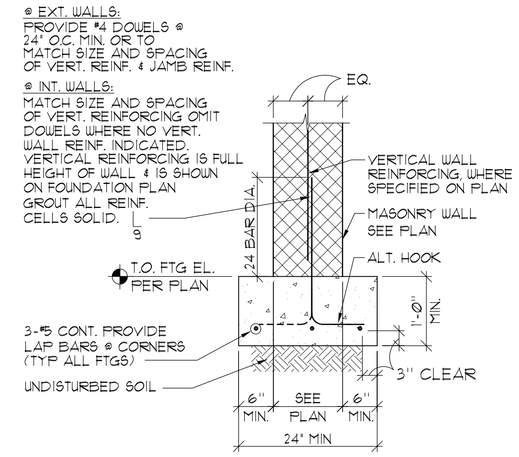

1 / S2.1 TYPICAL WALL FOOTING DETAIL
NOT TO SCALE

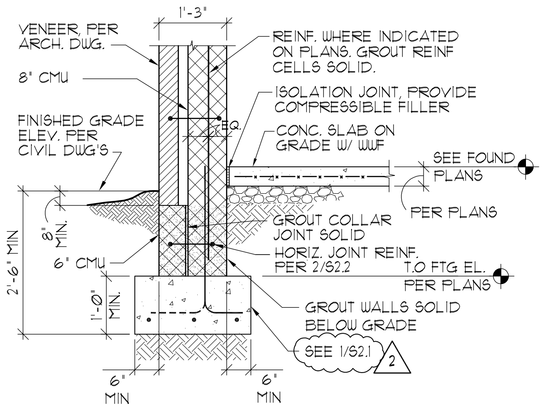

2 / S2.1 EXTERIOR WALL SECTION
NOT TO SCALE

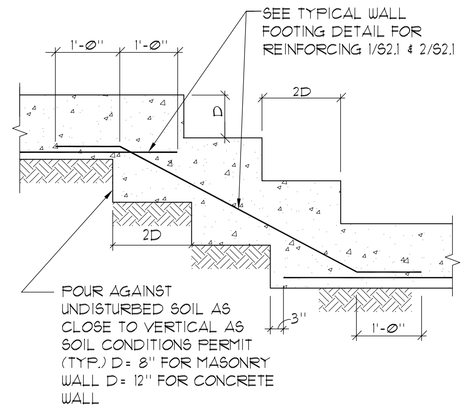

3 / S2.1 TYPICAL STEPPED WALL FOOTING DETAIL
NOT TO SCALE

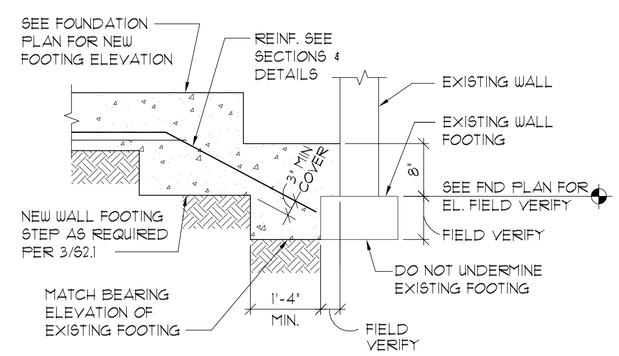

4 / S2.1 TYPICAL NEW FOOTING TIE-IN TO EXISTING FOOTING DETAIL
NOT TO SCALE

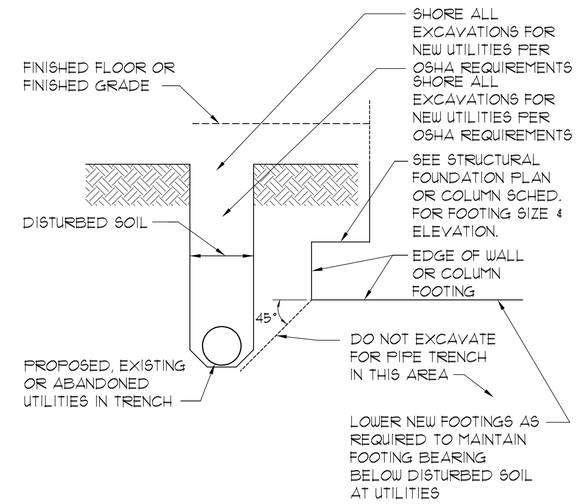

5 / S2.1 TYPICAL PIPE TRENCH EXCAVATION DETAIL
NOT TO SCALE

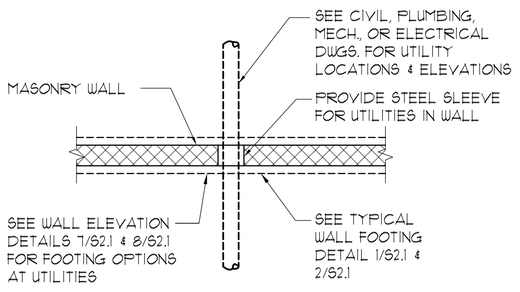

TYPICAL PLAN

6 / S2.1 TYPICAL WALL FOOTING AT UTILITIES DETAIL
NOT TO SCALE

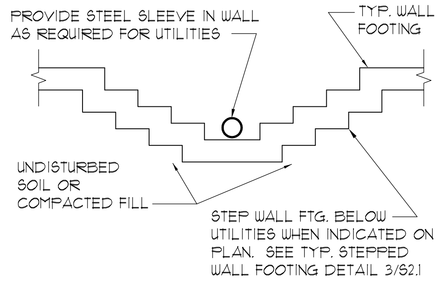

WALL ELEVATION

7 / S2.1 TYPICAL WALL FOOTING AT UTILITIES DETAIL
NOT TO SCALE

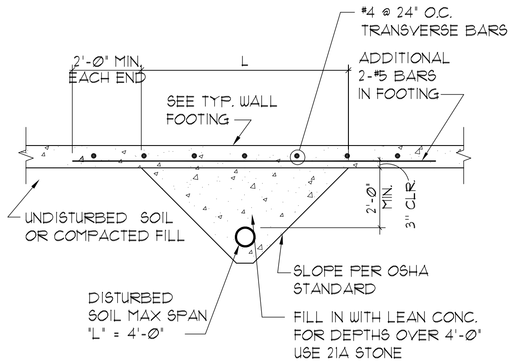

WALL ELEVATION

8 / S2.1 OPTIONAL WALL FOOTING AT UTILITIES DETAIL
NOT TO SCALE

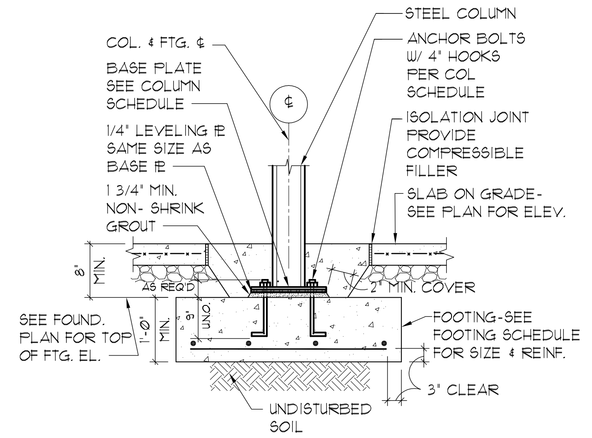

9 / S2.1 TYPICAL INTERIOR STEEL COLUMN FOOTING DETAIL
NOT TO SCALE

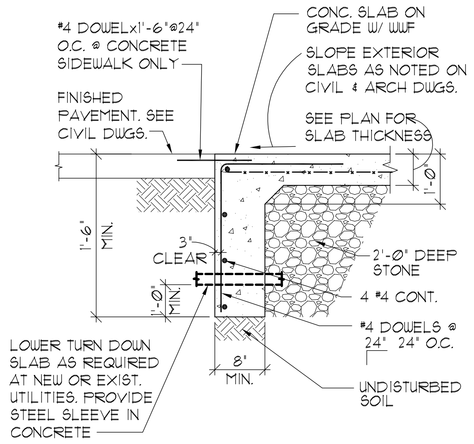

10 / S2.1 TYPICAL TURN DOWN SLAB
NOT TO SCALE

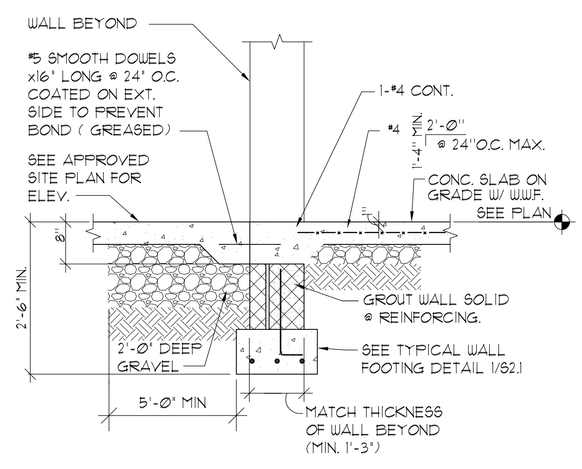

11 / S2.1 TYPICAL SLAB AT DOORWAY
NOT TO SCALE

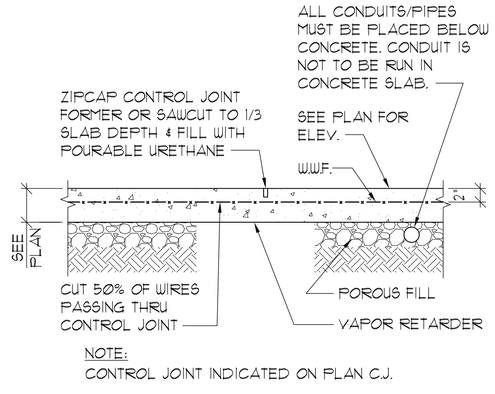

NOTE:
CONTROL JOINT INDICATED ON PLAN C.J.

12 / S2.1 TYPICAL SLAB ON GRADE CONTROL JOINT DETAIL
NOT TO SCALE

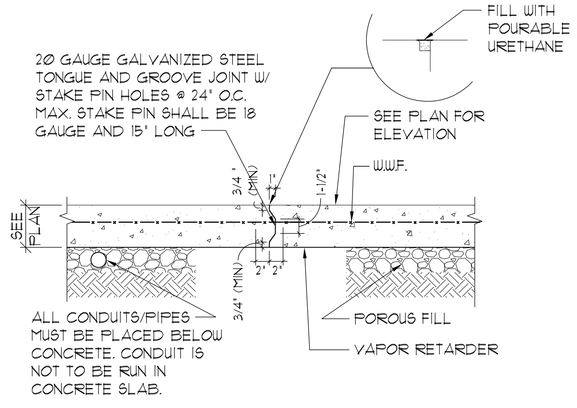

NOTE:
CONSTRUCTION JOINT MAY BE LOCATED AT CONTROL JOINTS. LIMIT POUR TO ACI RECOMMENDATIONS.

13 / S2.1 TYPICAL SLAB ON GRADE CONSTRUCTION JOINT DETAIL
NOT TO SCALE

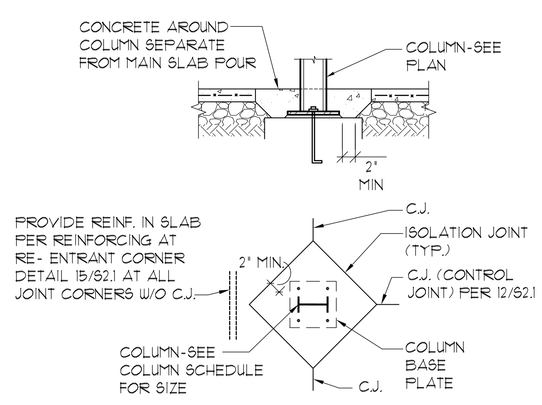

14 / S2.1 TYPICAL ISOLATION JOINT AT STEEL COLUMN DETAIL
NOT TO SCALE

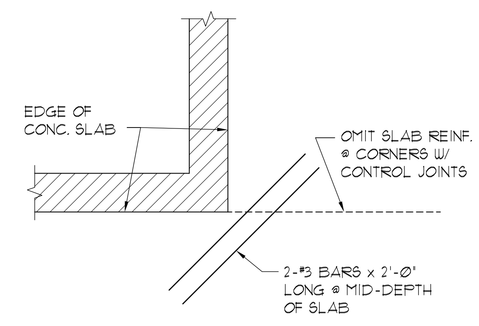

15 / S2.1 TYPICAL SLAB REINFORCING AT RE-ENTRANT CORNER DETAIL
NOT TO SCALE

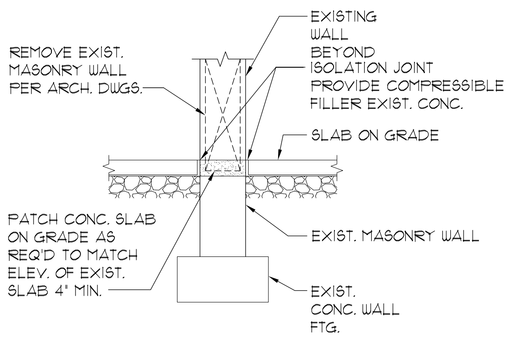

16 / S2.1 TYPICAL EXISTING SLAB ON GRADE PATCH @ NEW DOOR
NOT TO SCALE

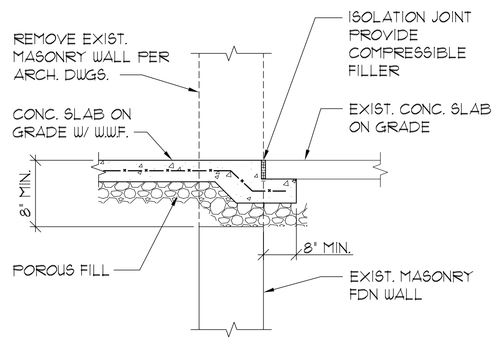

17 / S2.1 SECTION
NOT TO SCALE

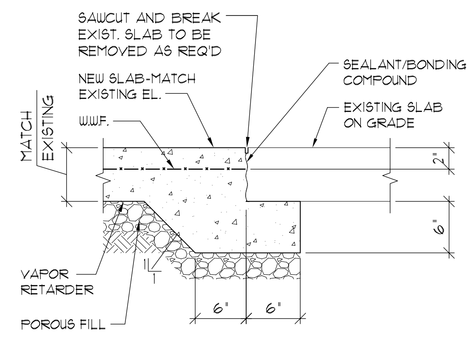

18 / S2.1 NEW SLAB AT EXISTING SLAB ON GRADE DETAIL
SCALE: NOT TO SCALE

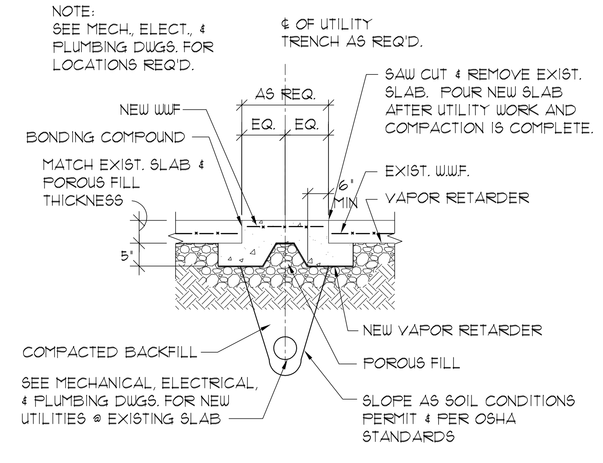

19 / S2.1 UTILITY AT EXISTING SLAB ON GRADE DETAIL
NOT TO SCALE

Bignell Watkins Hasser
ARCHITECTS P.C.

ONE PARK PLACE, SUITE 250
ANNAPOLIS, MARYLAND 21401
Maryland: (301) 261-8228
MD Fax: (410) 224-4443
Baltimore: (410) 841-6595
Annapolis: (410) 224-2727

8500 LEESBURG PIKE, SUITE 503
VIENNA, VIRGINIA 22182
Virginia: (703) 288-3320
VA Fax: (703) 288-4211

Website: www.bigwaha.com

These drawings are the property of the Architect. Bignell Watkins Hasser Architects P.C. Unauthorized reproduction for any purpose is an infringement upon copyright laws. Violators will be subject to prosecution by fullest extent of the law.
Written dimensions on these drawings shall have precedence over scale dimensions. Contractors shall verify and be responsible for all dimensions and conditions on the job and this office must be notified of any variation from the dimensions and conditions shown by these drawings.

Revisions

#	Date	
1	02/17/10	PERMIT/BID SET
2	04/22/10	ADDENDUM 4

Client:
CITY OF TAKOMA PARK

Location:
TAKOMA PARK, MD LOCATION

Project:
CITY OF TAKOMA PARK PUBLIC WORKS FACILITY

TYPICAL DETAILS

Drawn by: SGL

Project No.: 09028.00

Date: 02-17-10

Professional Certification
I certify that these documents were prepared or approved by me, and that I am a duly licensed professional engineer under the laws of the State of Maryland. license number 23268 expiration date 3-4-11

ADTEK
ADTEK ENGINEERS, INC.
10003 Virginia Manor Rd.
Beltsville, Maryland 20705
Phone: 301-210-7002
Fax: 301-210-7003
www.adtekengineers.com

S2.1